MONO

Innovative equipment
for traditional baking

Fan Assisted Bakery Deck Oven

| ENERGY SAVING | TIME SAVING |
IMPROVED PRODUCT VOLUME

MADE IN BRITAIN

MONO's **NEW** Ground-Breaking Fan Assisted Deck

The Ultimate Energy Saving Professional Bakery Deck Oven

FAN ASSISTED

ENERGY SAVING

TIME SAVING

INCREASED VOLUMES

Fan Assisted Double Depth Deck Oven with optional Extractor Canopy and Bumper Bars

Absolutely Incredible Energy and Time Saving Benefits

MONO's **NEW** industry-leading Fan Assisted Deck Oven is the result of an exciting 2-year collaboration between MONO and one of the UK's leading supermarket chains to design the most energy-efficient deck oven possible, whilst simultaneously improving the overall bake quality resulting in improved bake yields.

Fan Assisted Single Depth Deck Oven

In addition to the traditional top and bottom heat generated in a standard deck oven, the Fan Assisted Deck Oven also uses fan derived technology to drive the baking process. Each module in the Fan Assisted Deck Oven features two perfectly balanced fans which circulate the hot air evenly around the products during the bake cycle, resulting in a major reduction in energy consumption and reduced bake times, whilst consistently delivering a more even bake colour.

MONO's Fan Assisted Deck Ovens provide the ultimate energy saving baking solution for all kinds of bakeries including in store bakeries (ISBs), independent bakeries and artisan bakeries. Available in single and double-depth models, the Fan Assisted Deck Oven is absolutely perfect for tin breads, bloomers, farmhouse loaves and all oven bottom breads, along with everything else you would normally expect to bake in a traditional deck oven.

Naturally, the fan assisted baking feature can be switched off completely if required.

SAVE Up To **50%*** Energy and Typically **40%** Faster Warm Up Times!

Independent tests across a number of stores, using an energy monitoring system, showed MONO's Fan Assisted Deck Oven to be up to **50%* more energy efficient** than the existing traditional deck oven. The test results also showed MONO's Fan Assisted Deck Oven reached initial baking temperatures 45 minutes quicker than the standard equivalent deck oven.

REDUCE Bake Times By Up To **25%** With Superb Results

Incredibly, the same independent tests reported that for some products like tin breads and bloomers, there was an average reduction in bake times of around 25%, whilst delivering a superb quality of bake each time.

** With optimum usage and programming, using 7-Day Timers, Auto Shutdown, fan assisted baking, reduced bake times etc. when compared with similar ovens of the same size without fan assisted baking.*

NEW Fan Assisted Technology

Provides Phenomenal Energy Saving Benefits

The **NEW** fan assisted baking technology used in the Fan Assisted Deck Oven transforms our already amazing deck oven in to one which constantly delivers superb bake results and provides absolutely fantastic energy savings time and time again. Independent trials have shown incredible energy savings of up to 50%* when compared with a similar sized deck oven without fan assisted baking.

The twin fans drive hot air evenly around the baking chamber creating swirls of heat which flow around each product to create a more even bake with more accurate consistency. At the same time, the assisted hot air flow provides a much quicker bake time whilst also improving the overall look and taste of the bread.

Interestingly some products can be baked on average up to 26% quicker than in a standard deck oven. Add to this the fact that the initial warm up time of the oven is around 40% faster too and it is immediately apparent how this oven saves so much on energy consumption!

Independent Bake Trials Show Fantastic Time Saving Results

The most impressive time savings were recorded when baking Bloomers and Tin Loaves. Incredibly, on a standard Bloomer bake, there was an average bake time saving of 10 minutes per bake and on Tin Loaves there was an average bake time saving of 8 minutes per bake.

These much quicker bake cycles not only save on energy consumption but also provides a much quicker turnaround of product to address peak demand times and also the all-important early morning availability.

Improved Product Quality and Greater Consistency

The **NEW** fan assisted technology also provides a much more consistent bake quality compared with non fan assisted deck ovens of a similar size.

Blind tests undertaken by an independent Quality Panel showed that the bread baked using MONO's Fan Assisted Deck Oven outshone the results of a competitor for all bread types tested ie. White Farmhouse 400g & 800g, White Bloomer 400g & 800g, Tiger Bloomer 800g, Wholemeal 800g and Soft Rolls. The criteria used to assess the overall quality of the breads baked were Appearance, Odour, Flavour and Texture.

Comparison of Average Bake Times

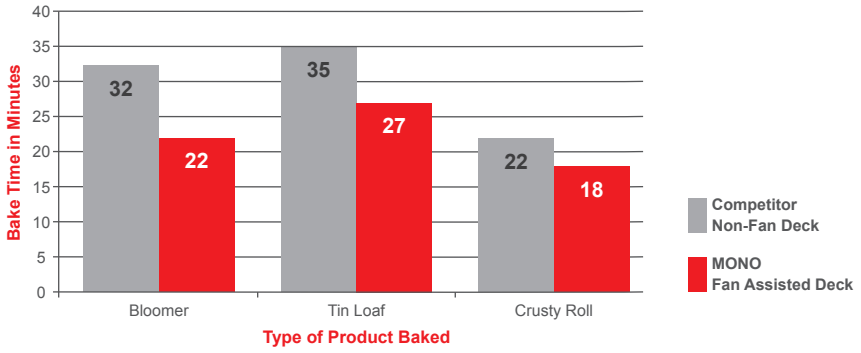

** With optimum usage and programming, using 7-Day Timers, Auto Shutdown, fan assisted baking, reduced bake times etc. when compared with similar ovens of the same size without fan assisted baking.*

Setting The Standard For Bakery Deck Ovens

Featuring a Wealth of **NEW** Features and Benefits

7 Key Features

- **NEW** integrated fan technology for faster, more uniform bakes with greater product volume
- **NEW** 6 Phase Baking provides complete control of the baking process
- **NEW** higher bottom deck loading height and lower top deck loading height for improved operator handling
- **NEW** magnetic door catch which provides a more responsive closure when steaming (double depth oven only)
- Improved insulation design at key leak points for improved heat retention and energy efficiency
- Steam is generated via open reservoirs to reduce the opportunities for scalling and pipe blockages
- No steam pods required as the oven generates its own steam reducing potential service issues

7 Key Benefits

- **Up to 50%* saving on energy consumption** compared with similar ovens without fans
- **Typically 25% reduction in bake times** e.g. typically saving 10 minutes when baking Bloomers
- **Up to 9% increase in product volume** when baking crusty bread rolls
- **Around 40% reduction in initial warm up times** resulting in reduced energy consumption
- Some products can be baked at lower temperatures due to the integrated fan technology
- Improved operational efficiency as the tins / trays do not need to be moved during the baking process
- Optimum baking environment prevents under baking and sidewall collapse

** With optimum usage and programming, using 7-Day Timers, Auto Shutdown, fan assisted baking, reduced bake times etc. when compared with similar ovens of the same size without fan assisted baking.*

A Wealth of Benefits and **NEW** Features from MONO's **NEW** Fan Assisted Deck Ovens

1

Major Energy Saving Benefits:

Up to 40% Faster Warm Up Time

- Reduces energy consumption
- Provides faster turnaround of first bake

Typically 25% Reduction in Bake Times

- Tests showed a typical reduction of 10 minutes for Bloomers

Up to 50%* Energy Savings

- Superb energy saving opportunities when using all energy saving features

**With optimum usage and programming, using 7-Day Timers, Auto Shutdown, fan assisted baking, reduced bake times etc. when compared with similar ovens of the same size without fan assisted baking.*

12

NEW Improved Operator Experience

- Ergonomically redesigned for improved usability
- Higher loading height for bottom deck
- Lower loading height for top deck

11

NEW Improved Insulation Design

- Generous use of thick solid slab Rockwool RW5 insulation
- Achieves Lamda 0.034W/mK on conductivity scale
- High levels of fire performance

10

Energy Saving Insulated Doors

- Stainless steel doors
- Superwool insulation between door panels helps retain heat inside the oven chambers
- Integrated door seals retain heat and steam in the oven chamber

2

NEW Twin Fan Technology

- Twin fans circulate hot air around the product for consistently even bakes
- Fans rotate at up to 2000rpm
- Fans can be programmed for each of the 6 individual Bake Phases
- Oven can be used with or without the fans being active

3

NEW Smaller Footprint

- **NEW** smaller footprint compared with many competitor ovens
- Maximises the usable space in the bakery

4

Energy Saving Integrated Steam System

- No need for external steam pods
- Steam is generated by the oven itself via water troughs
- No additional energy source required

9

Solid, Heavy Sole Plate for the Perfect Artisan Bread

- Solid, heavy composite sole plate
- Provides superb heat retention
- Provides even heat distribution
- Provides a balanced bottom heat across the deck
- Ideal for oven bottom and artisan breads

8

NEW Optional Extra: Bumper Bars

- Protect the side of the oven
- Creates 100mm (4") space between equipment
- Can be mounted on the left/right or on both sides
- Available for top and/or bottom mounting

5

Feature-Packed Touch Screen Controller

- **NEW** 6-Phase baking
- Full colour touch screen controller
- Stores 240 programmes
- Easy access Favourites Menu
- 7-Day, 24-Hour Timer
- Energy saving Sleep Mode
- Energy saving Auto Shutdown
- Manual Bake option
- Full Load / Half Load options
- Programmable steam function
- Independent top and bottom heat
- Programmable fans per phase

6

NEW Optional Extra: Double Peel Holder

- Crafted in solid stainless steel
- Can hold two peels
- Can be mounted on the left or right hand side of the oven
- Models available to suit ovens with or without canopies

7

NEW Magnetic Door Closures*

- More positive door closing contact
- Helps retain steam inside the chamber during the steaming process

**Double depth deck oven only*

Available Accessories

Twin Peel Holder

Bumper Bars

Extractor Canopy

Deck Setter / Loader

Increase Product Volumes by Up To **9%**

Crusty roll baked in a non fan assisted oven

Crusty roll baked in a fan assisted oven - **up to 9% volume increase**

Another great advantage of baking in MONO's Fan Assisted Deck Oven is that some products like crusty rolls display a visible increase in volume.

Displacement tests carried out on crusty rolls using exactly the same recipe and the same dough piece weights delivered tangible volume increases; fifty percent of the rolls were baked in a traditional deck oven and the other fifty percent were baked in the Fan Assisted Deck Oven. The test was then repeated several times to establish a true indication of the average volume increases across a number of bakes.

The end result was quite dramatic. On average the crusty rolls baked in MONO's Fan Assisted Deck Oven showed an average volume increase of 9%; the rolls looked visibly larger than their counterparts and demonstrated a beautiful shiny crust.

NEW Space-Saving Smaller Footprint

MONO's **NEW** Fan Assisted Double Depth Deck Oven has also been redesigned to be much more compact than many of its competitors on the market providing more usable space in the bakery without compromising on the number of trays that can be loaded in a single bake.

Dimensions	Well Known Competitor Double Depth Deck	MONO Fan Assisted Double Depth Deck
Width	2,070mm (81½")	1,975mm (77¾")
Depth	2,203mm (63¾")	2,140mm (84½")
Height	2,096mm (82½")	1,950mm (76¾")
Cubic Area	9.56m² (337½ft²)	8.24m² (291ft²)

Fully-Integrated Energy Saving Steam System with Minimum Maintenance

The innovative steam generating system featured on MONO's Fan Assisted Deck Ovens produces a plentiful supply of saturated steam which is generated by the oven itself using solid, heavy aluminium water troughs; thereby removing the need for expensive external boilers or steam generators, along with their associated maintenance costs. As the steam is produced directly by the oven the actual kW rating per deck is also reduced compared with ovens using traditional external steam pods.

To counteract any drop in temperature after steaming, a clever Isotherm Recovery Programme automatically triggers after a steam cycle which rapidly recovers the deck oven chamber's temperature to produce the perfectly finished, shiny crust. Just a single water supply is required to be connected to the oven which is then diverted via a manifold system to feed each of the decks in the oven stack. This means that service and maintenance is kept to a minimum whilst easy access is provided by removable panels on the back of the deck oven.

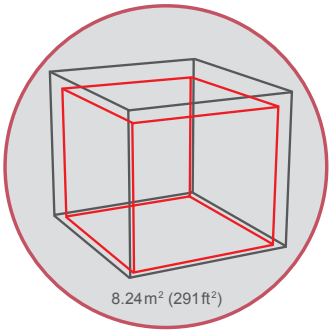

Energy Efficiency: The Keystone of Every Design Decision

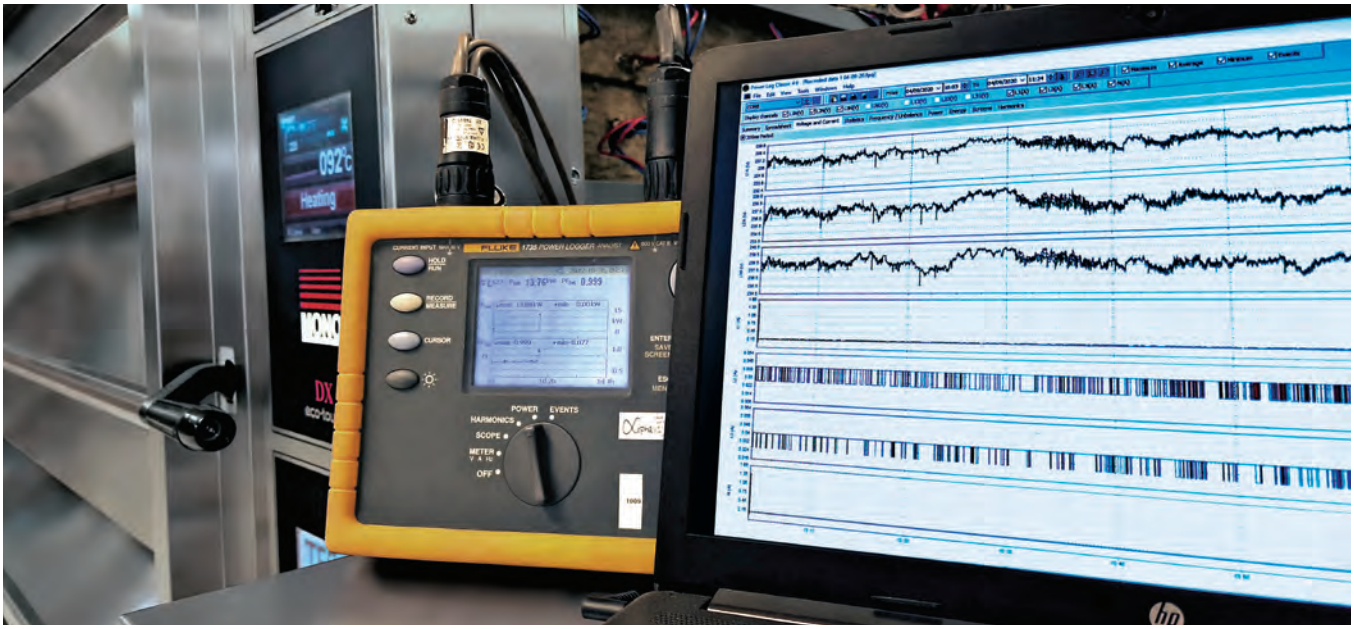

When approaching the design of MONO's **NEW** Fan Assisted Deck Oven the overriding objective was not only to create a superb fan assisted, energy saving deck oven, but to ensure that each and every decision made would have a positive impact on the overall energy efficiency of the oven.

So, in addition to introducing new fan technology to our much-loved standard deck oven, the Design Team also took the opportunity to look at new materials, new devices, new technology and new design improvements to take the deck oven to a completely new level in terms of energy efficiency and the quality of the bake.

NEW Improved Insulation Design

As insulation plays such a crucial role in both retaining valuable heat in the oven chamber and in preventing expensive heat loss, a great deal of attention was given to minimising any potential heat leakages and to ensure the oven's insulation values were as high as possible. Using advanced thermal imaging cameras enabled even the smallest areas of heat leakage to be identified and sealed.

MONO's Fan Assisted Deck Oven is generously insulated using high quality, Rockwool RW5 resin-bonded slabs which achieve Lambda 0.034 W/mK on the thermal conductivity scale. This not only provides excellent heat retention properties but also high levels of fire performance.

The steam generated by the integrated steam generating system on the Fan Assisted Deck oven is so generous that each door features magnetic door closures which prevent the door from being forced open during the steaming process; this naturally helps to retain as much steam and heat as possible in the oven chamber. As a result, the bread not only bakes with a superbly shiny crust, but the oven also works more efficiently.

2 Key Energy Saving Software Features

There are a number of innovative energy saving features built in to the software of the Fan Assisted Deck Oven's touch screen controller which can help to reduce energy consumption significantly.

Sleep Mode directs the oven to revert to a defined, pre-set temperature after a given period of time in an idle state. The 'Sleep' state reduces energy consumption by reverting the oven to the optimum core temperature (usually around 50ºC lower than the bake temperature) between bakes. This enables it to return to full baking heat as quickly as possible but at the same time preventing the oven from standing idle and consuming power at full baking temperatures.

Auto Shutdown function prevents the oven from using costly energy when left on for long periods of time, or overnight, by mistake. The Auto Shutdown facility only needs to be activated once in the General Settings menu and as soon as the oven is switched on an 8 hour countdown timer is started. If the oven is not in a bake cycle and there has been no activity at the end of the 8 hour period, the oven will automatically switch itself off.

Technical Specifications	Fan Assisted Single-Depth Deck Oven	Fan Assisted Double-Depth Deck Oven
Dimensions		
Width without Bumper Bars	1,975mm (77¾")	1,975mm (77¾")
Width with Bumper Bars	2,075mm (81¾")	2,075mm (81¾")
Depth	1,338mm (52¾")	2,140mm (84¼")
Height without Canopy (including flue)	2,156mm (85")	2,156mm (85")
Height with Canopy	2,346mm (92½")	2,346mm (92½")
Height with Canopy and Extractor	2,610mm (102¾")	2,610mm (102¾")
Crown height	203mm (8")	203mm (8")
Internal deck height with door open	188mm (7½")	188mm (7½")
Internal usable area per deck	1.16m² (12½ft²)	2.26m² (24⅓ ft²)
Bottom deck loading height	345mm (13½")	533mm (21")
Top deck loading height	1,697mm (67")	1,590mm (62½")
Features		
Number of Decks	5	4
Number of programmes	240	240
Fan assisted	Yes	Yes
Full colour touch screen controller	Yes	Yes
Manual Bake Mode	Yes	Yes
Favourites Menu	Yes	Yes
7-Day, 24-Hour Timer	Yes	Yes
8-Hour Countdown Timer	Yes	Yes
Full-Load and Half-Load option	Yes	Yes
6-Phases per bake programme	Yes	Yes
Energy saving Sleep Mode	Yes	Yes
Energy saving Auto Shutdown	Yes	Yes
Programmable Fan per Phase	Yes	Yes
Independent top and bottom heat	Yes	Yes
Solid, heavy sole plate	Yes	Yes
Integrated steam generating system	Yes	Yes
Pre-Steam function	Yes	Yes
Single point water connection	Yes	Yes
Single point electrical connection	Yes	Yes
Control panel on the left or right	Yes	Yes
Programmable Damper	Yes	Yes
RW5 solid slab insulation	Yes	Yes
Superwool insulated stainless steel doors	Yes	Yes
Interlocked door / fan switch	Yes	Yes
Magnetic door closures	No	Yes
USB Programmable	Yes	Yes
Customisable Wallpapers	Yes	Yes
Lockable castors	Yes	Yes
Emergency Isolation Switch	Yes	Yes
On-board diagnostics screen	Yes	Yes
Drainage required	No	No
Number of Trays per Deck		
600mm x 800mmm (portrait)	2	4
600mm x 400mm (portrait)	3	6
18" x 30" (portrait)	3	6
18" x 26" (portrait)	3	6
600mm x 400mm (landscape)	4	8
Optional Extras		
Canopy with Extractor Fan	Yes	Yes
Canopy without Extractor Fan	Yes	Yes
Protective Side Bumper Bars	Yes	Yes
Double Peel Holder	Yes	Yes
Deck Loader / Setter	No	Yes
Water Softening Unit	Yes	Yes
Electrics		
Power supply	415V, 3 phase +neutral +earth, 50HZ 42kW per oven, 12 amps per phase, per deck. 80 amp supply required.	415V, 3 phase +neutral +earth, 50Hz. 59kW per oven, 21 amps per phase, per deck. 100 amp supply required.
The oven must be connected to the mains supply using a **30mA Residual Current Device** (**RCD**). A 30mA RCD must protect the supply to this oven. A qualified electrician must carry out all electrical work in accordance with national and local regulations. The RCD is a safety device which automatically switches off the power supply if an earth fault develops. Test the RCD after installation and then quarterly for the lifetime of the oven.		
Water Connection		
All ovens with steam require a 15mm (½") BSP/NPT water supply at a pressure of 2-3 bars (29-44psi), located approximately 250mm (9¾") from the right corner and 100mm (4") from the top corner of the stand when facing the front of the oven. Only one water supply is required per oven stack. A manifold, fitted with a non-return check-valve, supplies all decks from one central connection point. It is recommended that the water supply conforms to the following specifications: Hardness 2-4 grains per gallon, PH Range 7-8, Chloride concentration 0-30ppm.		
Noise Level	Less than 80dB	Less than 80dB

Specifications correct at time of publication. MONO Equipment reserves the right to amend the specification without prior notice.

MONO Equipment is the leading designer and manufacturer of bakery and foodservice equipment in the United Kingdom. This proud heritage of British Craftsmanship, combined with a reputation for creating high-quality, innovative products, can be traced back to its origins in 1947.

MONO Equipment's professional bakery deck ovens are the preferred choice of many of the UK's leading supermarket chains and independent artisan bakers who all demand the very best quality, reliability and value for money.

MONO Equipment's **NEW** Fan Assisted Deck Oven builds on this amazing legacy, combining cutting-edge design with innovative technology to create a ground-breaking, professional bakery oven that provides truly outstanding energy saving and time saving benefits. With the addition of fan assisted baking, not only does the oven warm up faster and bake faster, but also reduces energy consumption quite dramatically when all the various energy saving features are used collectively.

Scan using your smart phone to view the Fan Assisted Convection Ovens Video.

Naturally, the fan assisted baking can be switched off, if required, so that the oven reverts to operating as a standard MONO bakery deck oven.

To find out more contact us directly or check out our website below.

MONO

MONO Equipment
Queensway, Swansea West Industrial Park,
Swansea SA5 4EB United Kingdom

Tel: +44 (0)1792 561 234 (Switchboard)
Tel: +44 (0)1792 564 000 (UK Sales)
Tel: +44 (0)1792 564 004 (International Sales)
Tel: +44 (0)1792 564 048 / +44 (0)1792 564 039 (Spares)
Fax: +44 (0)1792 561 016

Email: sales@monoequip.com
Web: **www.monoequip.com**

an Ali Group Company

GROUP

The Spirit of Excellence

V2.0