alexandersolia
Food processing

SWA RANGE

SALAD AND VEGETABLE WASHING WITH INTEGRATED CENTRIFUGE

GASTRONOMY / CANTEENS / COMMERCIAL KITCHENS / FOOD INDUSTRY

WASHING AND DRYING
FOR 30 – 500 MEALS A DAY
SALAD • VEGETABLES • FRUITS

At a glance:

- → Machine entirely made of stainless steel
- → Gentle and extremely thorough wash and spin cycle in a single step
- → Efficient rinsing process for remaining dirt particles
- → Continuous regeneration and fresh water supply
- → Excellent ecological and economic benefits

Efficient ultra-fine screen filters against floating particles, Resource-saving due to its own water tank

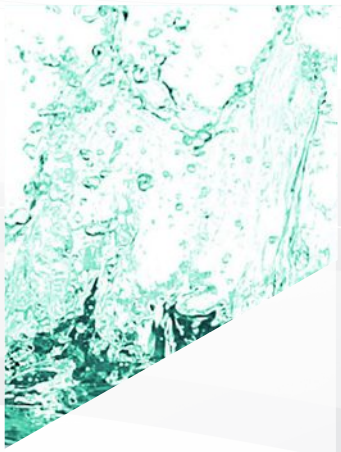

Innovative water roller for optimal cleaning

10 individually programmable washing programs, six of which are pre-set

Optimized washroom filling for gentle washing even for sensitive products

SWA 60.2

WASHING AND DRYING

30 + SERVINGS PER DAY

FOR SMALLER VOLUMES UP TO 80 kg/h

At a glance:

- → Machine entirely made of stainless steel
- → Simple loading and unloading
- → Washing for small spaces
- → Complete processing system can be installed
- → Digital controls
- → Delivery includes washing and centrifuging basket
- → **4-5 litres water requirement per washing process**

Technical data

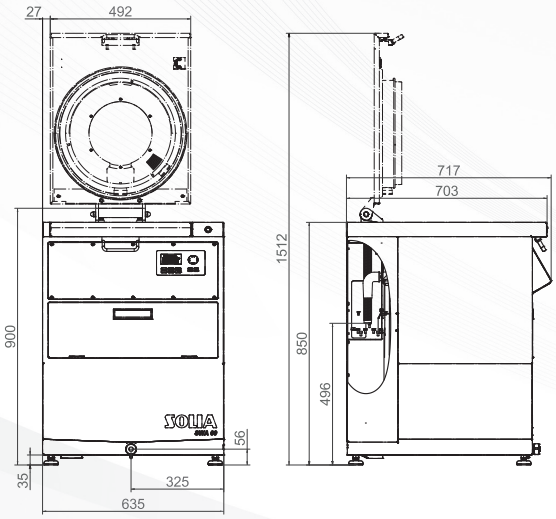

Technical data

Power supply	230 V, 50 Hz, 1,8 m cable with two pin earthed plug
Water connection	Tube R 1/2"
Water drainage	DN 50 (not included)
Output (kW)	1,1
Fuse protection (A)	16
Ingress protection	IP 54 (splash-proof)
Infinitely variable speed control (rpm)	0 - 600 variable
Capacity, storage container (l)	70
Dimensions (L x W x H)	635 x 717 x 850 mm
Basket Dimensions (RD x T)	370 x 220 mm
Weight (kg)	120

Processing capacity

Lettuce, vegetables, fruit	Capacity in kg – approx.	Head of lettuce approx.	kg/h - approx.	Product washed = 1 and centrifuged = 2
Lettuce	0,7 - 0,9	2 - 3	> 25	2
Lollo Rosso	0,8 - 1,0	3 - 4	> 28	2
Field salad	0,8 - 1,1		> 31	2
Endive cut	> 1,5	4 - 5	> 50	2
Tomato	5,0 - 6,0		> 240	1
Apple	5,0 - 6,0		> 260	1
Strawberry	2,5 - 3,0		> 120	1

More product examples, which can be processed with the SWA 60.2: Iceberg lettuce, radicchio, cress, spinach, cabbage, cucumbers, cauliflower, pears, oranges, lemons, mushrooms, radishes, peppers, parsley, fennel, leek, celery, broccoli, zucchini, etc.

The figures shown here are for illustration only and may deviate from the actual design version. Technical alterations are reserved. For additional accessories please refer to our price list.

SWA 75.2

WASHING AND DRYING

50 + SERVINGS PER DAY

FOR MEDIUM VOLUMES UP TO 100 kg/h

At a glance:

- → Machine entirely made of stainless steel
- → Simple loading and unloading
- → Fully-automatic washing sequence
- → Digital controls
- → Delivery includes washing and centrifuging basket

- → **5 - 6 litres water requirement per washing process**

Technical data

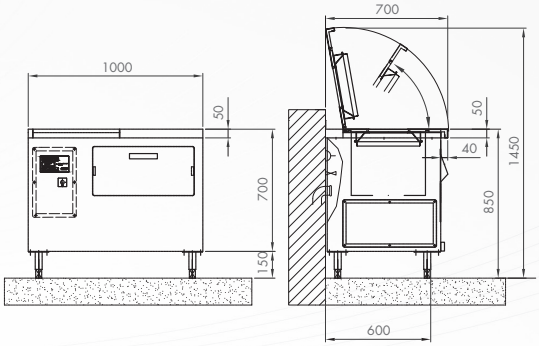

Technical data

Power supply	230 V, 50 Hz, 1,8 m cable with two pin earthed plug
Water connection	Tube R 1/2"
Water drainage	DN 50 (not included)
Output (kW)	1,1
Fuse protection (A)	16
Ingress protection	IP 54 (splash-proof)
Infinitely variable speed control (rpm)	0 - 600 variable
Capacity, storage container (l)	105
Dimensions (L x W x H)	1000 x 700 x 850 mm
Basket Dimensions (RD x T)	370 x 285 mm
Weight (kg)	120

Processing capacity

Lettuce, vegetables, fruit	Capacity in kg – approx.	Head of lettuce approx.	kg/h - approx.	Product washed = 1 and centrifuged = 2
Lettuce	0,9 - 1,1	3 - 4	> 31	2
Lollo Rosso	1,0 - 1,2	4 - 5	> 34	2
Field salad	1,1 - 1,4		> 40	2
Endive cut	> 2,3	5 - 6	> 65	2
Tomato	7,0 - 8,5		> 340	1
Apple	7,5 - 9,0		> 360	1
Strawberry	3,5 - 4,2		> 170	1

More product examples, which can be processed with the SWA 75.2: Iceberg lettuce, radicchio, cress, spinach, cabbage, cucumbers, cauliflower, pears, oranges, lemons, mushrooms, radishes, peppers, parsley, fennel, leek, celery, broccoli, zucchini, etc.

The figures shown here are for illustration only and may deviate from the actual design version. Technical alterations are reserved. For additional accessories please refer to our price list.

SWA 100.2

WASHING AND DRYING

500 + SERVINGS PER DAY

FOR LARGE VOLUMES UP TO 200 kg/h

At a glance:

- → Machine entirely made of stainless steel
- → Simple loading and unloading
- → Fully-automatic washing sequence
- → Digital controls
- → Delivery includes washing and centrifuging basket
- → **8 -10 litres water requirement per washing process**

Technical data

The figures shown here are for illustration only and may deviate from the actual design version. Technical alterations are reserved. For additional accessories please refer to our price list.

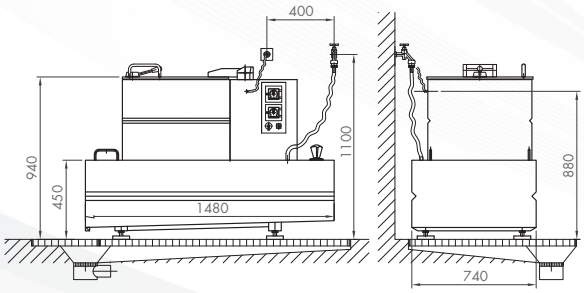

Technical data

Power supply	230 V, 50 Hz, 1,8 m cable with two pin earthed plug
Water connection	Tube R 3/4"
Water drainage	Floor channels
Output (kW)	1,5
Fuse protection (A)	16
Ingress protection	IP 54 (splash-proof)
Infinitely variable speed control (rpm)	0 - 600 variable
Capacity, storage container (l)	330
Dimensions (L x W x H)	1480 x 740 x 940 mm
Basket Dimensions (RD x T)	500 x 220 mm
Weight (kg)	250

Processing capacity

Lettuce, vegetables, fruit	Capacity in kg – approx.	Head of lettuce approx.	kg/h - approx.	Product washed = 1 and centrifuged = 2
Lettuce	1,5 - 1,7	7 - 9	> 48	2
Lollo Rosso	1,7 - 1,9	8 - 10	> 53	2
Field salad	1,7 - 2,1		> 59	2
Endive cut	> 3,5	8 - 11	> 100	2
Tomato	10,0 - 12,0		> 480	1
Apple	11,0 - 13,0		> 500	1
Strawberry	5,0 - 6,5		> 260	1

More product examples, which can be processed with the SWA 100.2: Iceberg lettuce, radicchio, cress, spinach, cabbage, cucumbers, cauliflower, pears, oranges, lemons, mushrooms, radishes, peppers, parsley, fennel, leek, celery, broccoli, zucchini, etc.

alexandersolia GmbH Alexanderstr. 59 – 61 D-42857 Remscheid
info@alexandersolia.com www.alexandersolia.com

Alexanderwerk SOLIA®