alexandersolia
Food processing

# m 6

## MULTI-PURPOSE KITCHEN MACHINE

GASTRONOMY / CANTEENS

CUTTING • SHREDDING • GRATING • STIRRING • BEATING
**30 + SERVINGS PER DAY**
KNEADING • CHOPPING • STEAKING • TENDERIZING

### At a glance:

- → IP 54 protection, optional IP 65
- → Easy-Klick system (stirring bowl)
- → entirely in stainless steel (HACCP optimized)
- → self-explanatory digital control (with overload protection)
- → Modular system (easy to use)
- → Optional with universal cabinet and as machine cabinet

One-piece unit for bowl mounting (perfect for processing dough)

EASY-KLICK System (stirring bowl)

Functional space for GN-containers

XXL filling chute as depot for processing large volumes in one step

# Accessories

**Universal basic unit, stainless steel**
561 000 0311*

Imperative for cutting attachment and diagonal cutting hopper

**Cutting attachment**
**with safety switch-off and pusher**
104 018 000*

Attention: universal basic unit not included!

**Diagonal cutting hopper**
with safety switch-off and pusher.
104 019 000

Attention: universal basic unit not included!

**Curved blade disc**
**stainless steel, adjustable double-blade**
0 - 5 mm 561 000 0352*

Cutting of e.g. cabbage, cucumber, peppers, onions

**Curved blade disc**
**stainless steel, adjustable single-blade**
0 - 10 mm 103 275 000

Cutting of soft vegetables

**Crescent blade disc, stainless steel**
3 mm 561 000 0363
4 mm 561 000 0360*
6 mm 561 000 0361

Cutting of boiled potatoes, leek, mushrooms, soft fruits

**Strip cutting discs, stainless steel**
2 x 2 mm Juliennes 561 000 0362
4 x 4 mm Juliennes 561 000 0364
6 x 6 mm 561 000 0366
8 x 8 mm 561 000 0368
Strip cutting of carrots, celery, radishes

**Crinkle cutting discs, stainless steel**
4 mm 561 000 0369
6 mm 561 000 0367

Crinkle cut of red beets, cucumbers, carrots

# Accessories

**Basic carrier disc, stainless steel for**

raw vegetable discs,
shredding discs,
grating discs,
potato grating disc,
potato pancake disc

568 000 0370*

**Raw vegetable discs, stainless steel, hand sharpened**

| | |
|---|---|
| 2 mm | 561 000 0380 |
| 2,5 mm | 561 000 0382 |
| 3 mm | 561 000 0371* |
| 4 mm | 561 000 0374 |

Shredding of raw vegetables e.g. celery, radish, potatoes, carrots, parmesan

**Shredding discs, stainless steel, hand sharpened**

| | |
|---|---|
| 6 mm | 561 000 0372* |
| 9 mm | 561 000 0373 |

Shredding of vegetables
e.g. celery, radish, potatoes, Gouda

**Grating discs, stainless steel**

| | |
|---|---|
| 2 mm | 561 000 0381 |
| 3 mm | 561 000 0375* |
| 4 mm | 561 000 0378 |

Grating e.g. bread, nuts, almonds, chocolates, cheese,

**Potato grating disc, stainless steel, crown-toothed**
561 000 0376

Grating e.g. potatoes, parmesan cheese

**Potato pancake disc, stainless steel, partly crown-toothed, combination of 376/380**
561 000 0377

Grating e.g. potatoes

**Dicer, complete, stainless steel**

| | |
|---|---|
| 4 x 4 x 5 mm | 103 240 100 |
| 5,5 x 5,5 x 5 mm | 103 243 100 |
| 8 x 8 x 10 mm | 103 246 100 |
| 11 x 11 x 10 mm | 103 250 100 |
| 16 x 16 x 10 mm | 103 252 100 |
| 22 x 22 x 10 mm | 103 255 100 |

**Protective hand grip for dicer disc**
105 040 190

**Cleaning Brush**
1500876

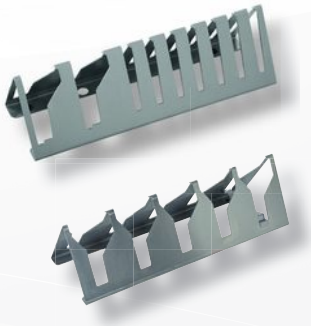

**Multi disc rack, stainless steel, for 2 discs and 7 exchange discs**
561 000 0191*

**Disc rack, for 5 discs**
561 000 0190

# Accessories

**Planetary stirring, beating and kneading unit 15 l**
106 035 000*

**Composed of:** planetary mixer head, stirring bowl 15 l, covering hood 15 l, beating whisk, stirring whisk and kneader

**Beating whisk, stainless steel**
15 l 561 000 0232

**Stirring whisk, stainless steel**
15 l 561 000 0242

**Kneader, stainless steel**
15 l 561 000 0265

**Meat und vegetable mincer 70 mm with safety switch-off**

104 045 000*

**Composed of:**
meat tray, pusher, mincer housing, worm, 3-part cutting set, coded, stainless steel, L&W.

Incl.: pre-cutter, 4-wing knife, coded perforated disc 4 mm, spacer ring 13 mm.

# Accessories

**Universal housing for strip cutter, steaker and meat tenderizer**
104 025 101

**Composed of:**
stainless steel housing and coupling M 6.
Attention: To be ordered together with strip cutter set and/or tenderizer/steaker set.

**Strip cutter set**
104 025 100
Safety switch-off in accordance with EU standard

**Composed of:** complete lid incl. funnel, magnet holder and pusher.
Attention: universal housing as well as the resp. inserts are not included.

**Cutting inserts, stainless steel**

| | |
|---|---|
| 3,3 mm | 15 00 727 |
| 5,0 mm | 15 00 728 |
| 6,6 mm | 15 00 729 |
| 9,9 mm | 15 00 730 |
| 19,8 mm | 15 00 731 |

**Steaker/meat tenderizer Set**
104 027 100

**Composed of:** feed chute, pusher and magnet holder.
Attention: universal housing as well as the resp. inserts are not included.

**Steaker insert**
15 00 732

**Meat tenderizer insert**
15 00 733

# Technical data

## Technical data

| | |
|---|---|
| Power supply | 400 V, 50 Hz<br>3 m cable with CEE plug 5-p |
| Output (kW) | 0,5 / 0,7 |
| Fuse protection (A) | 16 |
| Ingress protection | IP 54 (splash-proof) /optional IP 65 |
| Infinitely variable speed control (rpm)min | 160 / 320 |
| Dimensions (L x W x H) | 296 x 611 x 553 mm |
| Weight (kg) | 28 |

M 6 multi-purpose kitchen machine

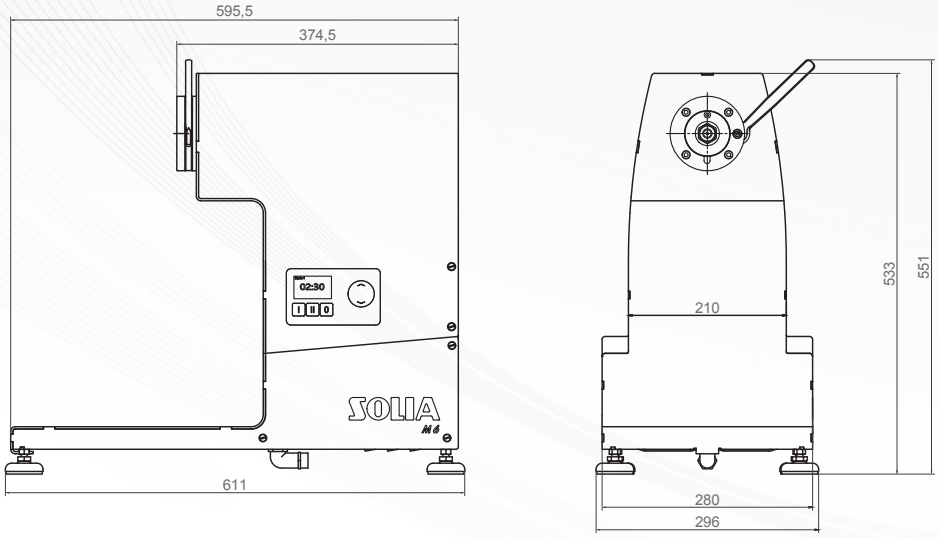


## Processing capacity

| Description | Use | Throughput** |
|---|---|---|
| Curved blade disc, double-bladed | Cutting of vegetables | 50 - 200 kg/h |
| Curved blade disc, single-bladed | Cutting of soft vegetables | 50 - 100 kg/h |
| Crescent blade discs, stainless steel | Cutting of boiled potatoes, leek and mushrooms | 80 - 150 kg/h |
| Strip cutting discs | Strip cut of e.g. celery, carrots | 80 - 150 kg/h |
| Raw vegetable discs | Shredding of e.g. celery, radishes, potatoes, carrots, parmesan | 80 - 180 kg/h |
| Shredding discs | Shredding of e.g. celery, radish, potatoes, carrots, gouda cheese | 120 - 200 kg/h |
| Grating discs | Grating e.g. bread, nuts, almonds, chocolates, cheese | 50 - 120 kg/h |
| Potato grating disc | Grating e.g. potatoes, parmesan cheese | 50 kg/h |
| Potato pancake disc | Grating e.g. potatoes | 50 kg/h |
| Dicer | Dicing of vegetables, fruits | 120 - 200 kg/h |

** The throughputs are dependent on cutting thickness and product.

The figures shown here are for illustration only and may deviate from the actual design version. Technical alterations are reserved. For additional accessories please refer to our price list.
*Items marked with an asterisk are part of the recommended basic equipment.

**alexandersolia GmbH** Alexanderstr. 59 – 61 D-42857 Remscheid
info@alexandersolia.com www.alexandersolia.com

Alexanderwerk SOLIA®