alexandersolia
Food processing

M 50

MULTI-PURPOSE KITCHEN MACHINE

GASTRONOMY / CANTEENS / COMMERCIAL KITCHENS

CUTTING • SHREDDING • GRATING • STRAINING • PUREEING • STIRRING
150 + SERVINGS PER DAY
BEATING • KNEADING • CHOPPING • STEAKING • TENDERIZING

At a glance:

- Basic unit and components made of stainless steel
- Automatic safety switch-off
- 2 speeds 160/320 min-1
- New development machine CI
- Protection class IP 65 – Completely closed housing
- Stirring bowl - Easy Fix System
- Coupler for add-on devices, with fast-locking gripper
- Energy-saving through on/off switch
- New OneTouch-control panel
- Compatible with electrically height-adjustable trolley (M 50 E only)
- Optionally mounted on trolley, mounted on cabinet or as cabinet installation

Cutting hopper with double safety switch off

Easy-to-use coupling system for change of attachments

Simplified operation thanks to OneTouch-control panel

1-Hand EASY FIX System for the stirring bowl

Accessories

Universal basic unit, stainless steel

130 012 200*

Imperative for cutting hopper, dual chamber and uninversal hopper

Ejection hopper for universal basic unit

150 085 000

Recommended for GN trolley

Cutting hopper, stainless steel, with safety switch-off

130 019 000*

Tube hopper

150 065 000

With 4 tube shafts, stainless steel, with safety switch-off and two pushers (with 6 tube shafts on request)

Curved blade discs, stainless steel,

adjustable, 0 - 5 mm	130 020 000*
adjustable, 0 - 10 mm	130 021 000
4 mm	130 021 050

Cutting of e.g. cucumbers, pepper, onions

Tomato blade disc, stainless steel

adjustable, 0 -10 mm 150 075 000

Cutting of soft vegetables and citrus fruits

Cabbage blade discs, stainless steel

1,3 mm	130 023 000
2,5 mm	130 024 000

Cutting of e.g. cabbage

Accessories

Strip cutting discs, stainless steel

2 x 2 mm Juliennes	565 000 0362
3 x 3 mm Juliennes	565 000 0363
4 x 4 mm Juliennes	565 000 0364
5 x 5 mm Juliennes	130 038 100
7 x 7 mm	130 039 100
10 x 10 mm	130 040 100

Strip cutting of e.g. carrots, turnip, radishes

Crinkle cut blade disc, stainless steel

adjustable, 2 - 7 mm 549 000 3703

Crinkle cut of beetroot, cucumbers, carrots

Raw vegetables disc, stainless steel. sharpened separately

3 mm 565 100 0373

Shredding of e.g. carrots, raw potatos, celery

Shredding discs, stainless steel, sharpened separately

6 mm	565 100 0376
9 mm	565 100 0377

Shredding of carrots, radish, celery

Grating discs, stainless steel

2 mm	565 100 0371
3 mm	565 100 0372

Grating of e.g. bread, nuts, almonds, chocolate

Cheese grating discs, stainless steel, sharpened separately

3 mm	553 100 0373
6 mm	553 100 0374

Disk Rack, stainless steel, for 5 discs incl. inlay for crescent blade disc.

(L 183,5 x W 560 x H 164 mm)

130 040 500

GN-Trolley, stainless steel, mobile, ball-bearing rubber castors with parking brake, incl. anti-slip mat
(L 625(926) x W 450 x H 286(1003) mm)

Delivered without GN containers or Euro crate

150 080 000

3 GN trolley, stainless steel, mobile, ball-bearing rubber castors with parking brake.
(L 594(759) x W 355 x H 557(948) mm)

Delivered without GN container

150 086 000

Accessories

Universal hopper, stainless steel
with cylinder mounting and safety switch-off.
Usable with all cylinders due to detachable waste chute.
150 061 300*

Wing, stainless steel, for cylinder: 331 - 337, 326, 328 553 100 0330*

Cheese wing, stainless steel, especially for the processing of cheese for cylinder: 331, 332, 334-337 und 326, 328, 338
130 076 006

Raw vegetable cylinders, stainless steel, sharpened separately

2 mm	130 070 337
3 mm	130 070 336*
4 mm	130 070 326

Shredding of e.g. raw potatoes, celery, carrots, bread

Shredding cylinders, stainless steel, sharpened separately

6 mm	130 070 334*
9 mm	130 070 335

Shredding of e.g. radishes, carrots

Grating cylinders, stainless steel

3 mm	130 070 332*
4 mm	130 070 331

Grating of e.g. hard bread, boiled potatoes, nuts, chocolate, almonds

Potato grating cylinder, stainless steel, crown toothed

2 mm 130 070 333

Grating of e. g. raw potatoes for dumplings

Potato pancake cylinder, stainless steel, combination of 333/337

130 070 328

Grating of e.g. raw potatoes

Straining wing, stainless steel, for cylinders: 100, 200, 300, 345
130 076 005

Straining cylinders, stainless steel

1,5 mm	130 072 100
3 mm	130 072 200

Straining plate for cylinder: 100, 200, 345
553 000 0342

Pureeing cylinder, stainless steel
130 072 300

Micro-fine grating cylinder, stainless steel
2 mm 130 072 345

Accessories

NEW DESIGN

Dual chamber hopper, stainless steel, with safety switch-off, two part design for hygienic cleaning

150 055 000*

Crescent blade discs, stainless steel

3 mm	565 000 0383
4 mm	565 000 0384*
6 mm	565 000 0386

Cutting of e.g. boiled potatoes, leek, mushrooms

Dicer, stainless steel complete

8 x 8 x 10 mm	549 000 0392
11 x 11 x 10 mm	549 000 0394
16 x 16 x 10 mm	549 000 0393
22 x 22 x 10 mm	549 000 0396

Dicing of e.g. vegetables, potatoes, celery, carrots

Planetary stirring, beating and kneading unit 20 l, with safety switch-off

150 052 000*

NEW 1-Hand EASY FIX stirring bowl!

Delivery includes: planetary mixer head, stirring bowl, covering hood ,beating whisk, stirring whisk 4 mm and kneader.

Beating whisk, stainless steel

1500896

Stirring whisk, stainless steel

4 mm	1500897
5 mm	1500898

Kneader, stainless steel

150 052 060

Accessories

Meat and vegetable mincer 82 mm, stainless steel, with coded perforated disc and safety switch-off
150 049 000*

Composed of:
mincer housing, worm, meat tray, pusher, 5-part cutting set, coded, stainless steel, L&W.
Incl.: pre-cutter, 4-wing knife, perforated disc 8 mm, 4-wing knife, perforated disc 3 mm, spacer ring 18 mm and spacer ring 36 mm for conversion of 3-part cutting set.

Universal housing
for strip cutter, steaker and meat tenderizer
130 025 100

Composed of:
stainless steel housing and coupling M 50.
Attention: To be ordered together with strip cutter set and/or tenderizer/steaker set.

Strip cutter set with safety switch-off in accordance with EU standard
130 026 100

Composed of:
lid complete incl. funnel, magnet holder and pusher. Attention: universal housing as well as the resp. inserts are not included in the delivery.

Cutting inserts, stainless steel

3,3 mm	1500727
5,0 mm	1500728
6,6 mm	1500729
9,9 mm	1500730
19,8 mm	1500731

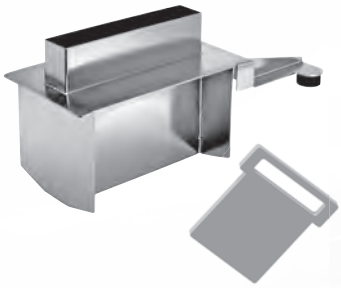

Steaker/meat tenderizer set
130 027 100

Composed of:
feed chute and magnet holder.
Attention: universal housing as well as the resp. inserts are not included in the delivery.

Steaker insert
1500732

Meat tenderizer insert
1500733

Technical data

Technical data cabinet installation

Power supply	400 V, 50 Hz 3 m cable with CEE-plug 5-p
Output (kW)	1,4/1,8
Infinitely variable speed control (rpm)	ca. 160/320
Fuse protection (A)	16
Ingress protection	IP 65
Sound pressure level (A)	ca. 62 dB
Dimensions (L x W x H)	500 x 744 x 650/700 mm
Weight (kg)	ca. 105 kg (without attachment)

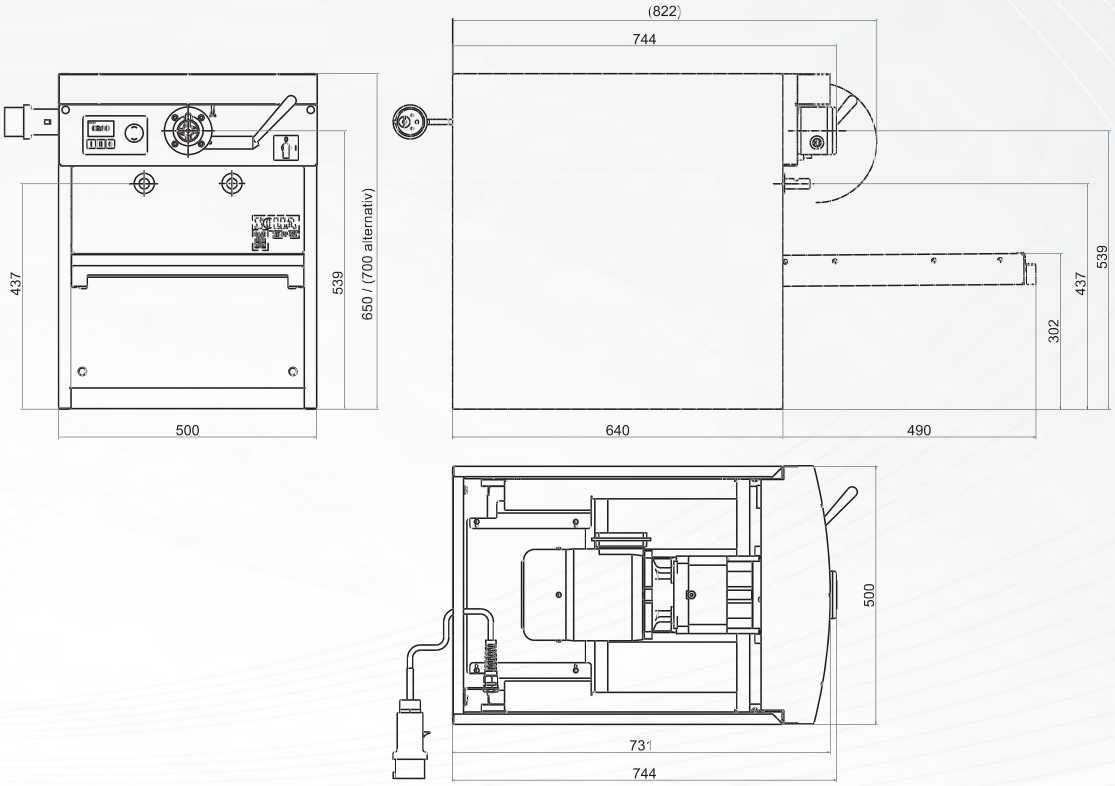

Processing capacity

Description	Use	Throughput**
Raw vegetables cylinders	Shredding of e.g. potatoes, celery, carrots	600 - 1000 kg/h
Shredding cylinders Shredding	Shredding of e.g. radishes, carrots	1100 - 1200 kg/h
Grating cylinders	Grating of e.g. hard bread, boiled potatoes, nuts, chocolate, almonds	600 - 900 kg/h
Potato grating cylinders	Grating of raw potatoes for dumplings	500 kg/h
Potato pancake cylinder	Grating of raw potatoes	800 kg/h
Dicer	Dicer Dicing of e.g. vegetables, potatoes, celery, carrots	300 - 780 kg/h

**The throughputs are dependent on cutting thickness and product

The figures shown here are for illustration only and may deviate from the actual design version. Technical alterations are reserved. For additional accessories please refer to our price list.
*Items marked with an asterisk are part of the basic equipment.

Technical data

Technical data drive unit

Power supply	400 V, 50 Hz, cable with CEE-plug 5-p
Output (kW)	1,4/1,8
Infinitely variable speed control (rpm)	ca. 160/320
Fuse protection (A)	16
Ingress protection	IP 65
Sound pressure level (A)	ca. 62 dB
Dimensions (L x W x H) drive unit	310 x 694 x 367 mm
Weight (kg)	ca. 52 kg (without attachment and trolley)

M 50 Drive unit

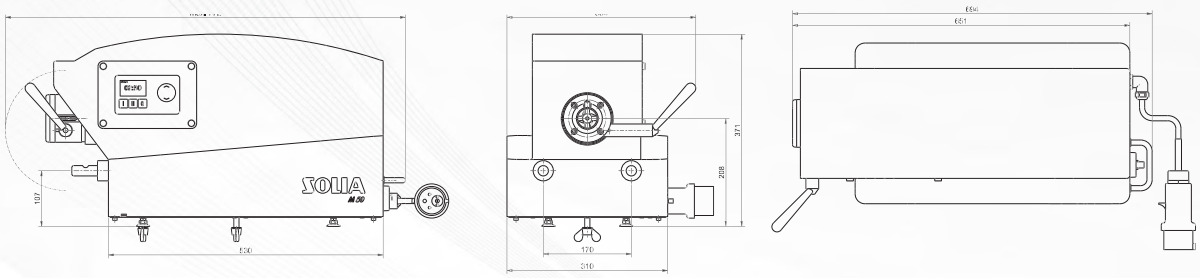

M 50 Trolley

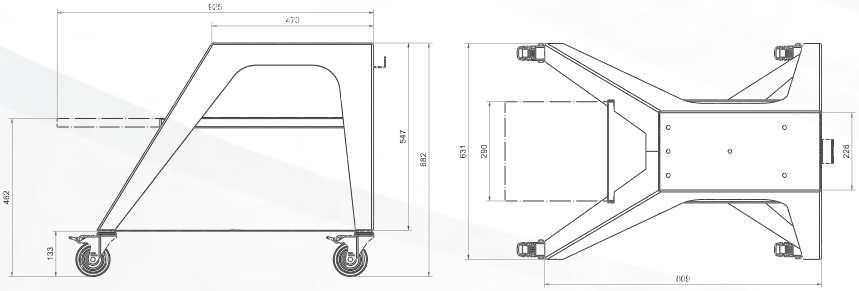

M 50 Trolley electronically height-adjustable

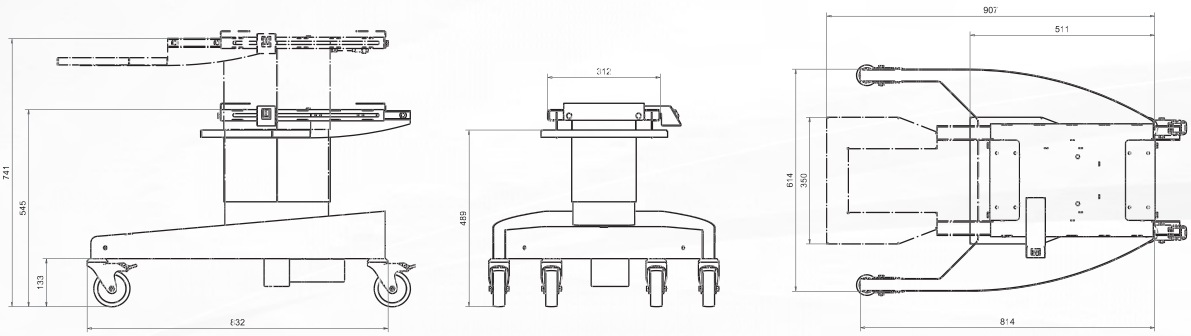

The figures shown here are for illustration only and may deviate from the actual design version. Technical alterations are reserved. For additional accessories please refer to our price list.
*Items marked with an asterisk are part of the basic equipment.

alexandersolia GmbH Alexanderstr. 59 – 61 D-42857 Remscheid
info@alexandersolia.com www.alexandersolia.com

Alexanderwerk SOLIA®