alexandersolia
Food processing

G 450

UNIVERSAL-VEGETABLE CUTTER

CANTEENS / COMMERCIAL KITCHENS / FOOD- / DELICATESSEN INDUSTRY

CUTTING • SHREDDING • GRATING
600 + SERVINGS PER DAY
DICING • STRAINING • PUREERING

At a glance:

- → Sturdy machine design
- → 500 mm headroom for collecting container
- → Automatic in- and outfeed possible
- → Safety switch-off
- → Optional with underframe for machine height increase of 460 mm
- → Throughput up to 4,000 kgs./h

Numerous application options :

Dicing in high capacity

Tube hopper for a guided slice cut

Innovative cutting hopper for cabbage

Accessories

Universal hopper with feeding chute, stainless steel, with safety switch-off
145 013 000
Universal hopper with grid stainless steel, with safety switch-off.
Optional for industrial clients
548 000 3200

Standard wing, stainless steel
six-wings 548 000 9305

Double wing, stainless steel
two wings 548 000 3501

Raw vegetable cylinders, stainless steel, sharpened separately

2 mm	145 070 302
3 mm	145 070 303
4 mm	145 070 304
5 mm	145 070 305

Shredding of e.g. carrots, radishes, celery

Shredding cylinders, stainless steel, sharpened separately

6 mm	145 070 306
9 mm	145 070 309
12 mm	145 070 312
16 mm	145 070 316

Shredding of e.g. carrots, radishes, celery

Grating cylinders, stainless steel

2 mm	145 071 450
2 mm	145 071 313
4 mm	145 071 312

Grating of e.g. hard bread, boiled potatoes, almonds, nuts, chocolate

Potato grating cylinder, 2 mm, crown toothing, stainless steel
2 mm 145 071 330

Potato pancake cylinder stainless steel, combination of 3330/302
145 071 480

Cutting cylinders, stainless steel, toothed, 6 pieces

1,5 mm	548 100 3815
2 mm	548 100 3820
2,5 mm	548 100 3825

smooth, 6 pieces

4 mm	548 100 3840
6 mm	548 100 3860

Slicing of e.g. potatos, celery, beetroots, carrots

Strip cutting cylinders, stainless steel

2 x 2 mm	548 100 9920
2,5 x 2,5 mm	548 100 9925
3 x 3 mm	548 100 9930
4 x 4 mm	548 100 9940
8 x 8 mm	548 100 9980
11 x 11 mm	548 100 9990

Strip cutting of e.g. potatos, celery, beetroots, carrots

Dicing wing, stainless steel
145 043 000

Dicers complete, stainless steel

6 mm	548 200 5200
8 mm	548 200 5300
11 mm	548 200 5400
16 mm	548 200 5500
22 mm	548 200 5600

Straining wing, stainless steel
two wings 548 000 3400

Residual ejection
145 072 910
Required for straining cylinder 1,5 and 3 mm

Pureeing cylinder, stainless steel
548 100 9440

Straining cylinders, stainless steel

1,5 mm	548 100 3410
3 mm	548 100 3430

Tube hopper for a guided slice cut, stainless steel
548 100 3600
Carrot insert, reduction of the diameter of the tube hopper
Ø 40 mm, with pusher Ø 36 mm 145 087 000
Ø 60 mm, with pusher Ø 56 mm 145 088 000

Curved blade disc, stainless steel, adjustable 0 - 10 mm
145 020 000

Cutting of e.g. carrots, gherkins, cucumbers

Cutting hopper, stainless steel specifically for cabbage- and cutting slices
145 034 000

Cabbage cutting discs, stainless steel

1,3 mm	145 023 000
2,5 mm	145 024 000

Cutting of cabbage

Curved blade disc, stainless steel, adjustable 0 - 10 mm
145 020 000

Cutting of e.g. carrots, bulbous vegetables

Tool stand Stainless steel, mobile
145 085 000

For six disks or four cylinders or three disks and three cylinders

Technical Data

Technical data

Power supply	400 V, 50 Hz[1] 3 m cable with CEE plug 5-p
Output (kW)	1,8 / 3,6
Fuse protection (A)	16
Ingress protection	IP 54 (splash-proof)
Infinitely variable speed control (rpm)	150 / 300
Dimensions (L x W x H)	616 x 1288 x 947 mm
Weight (kg)	170

[1] Maintenance-free pole-changing three-phase motor.
[2] Other voltages on request. Including thermal overload protection.

G 450
Universal vegetable cutter

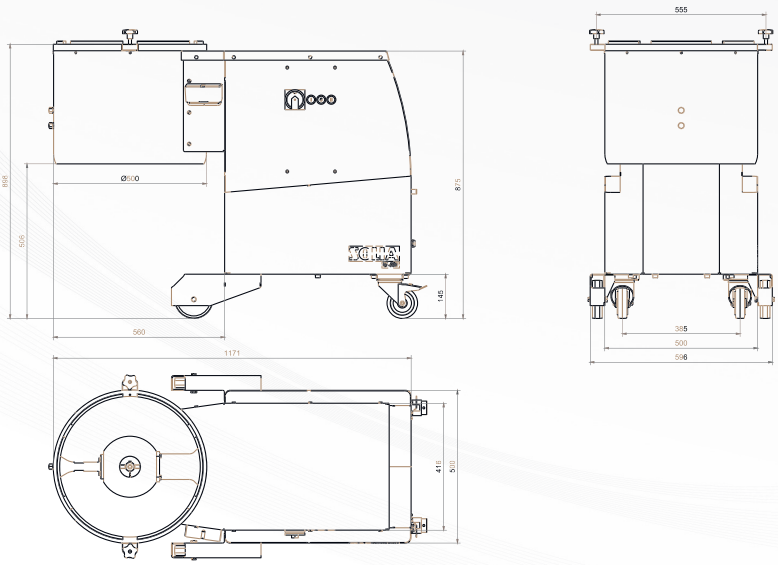

Processing capacity

Description	Use	Throughput**
Cutting cylinders	Slicing of e.g. raw potatoes	ca. 4.000 kg/h
Strip cutting cylinders	Slicing of e.g. raw carrots, celery	ca. 3.000 kg/h
Raw vegetable cylinders	Shredding of e.g. carrots, radishes, celery	ca. 3.000 kg/h
Shredding cylinders	Shredding of e.g. carrots, radishes, celery	ca. 3.000 kg/h
Grating cylinders	Grating of e.g. hard bread, boiled potatoes, nuts, chocolate, almonds	ca. 3.000 kg/h
Potato grating cylinder	Grating of raw potatoes for dumplings	ca. 2.000 kg/h
Dicer	Dicing of e.g. vegetables, potatoes, celery, carrots	ca. 3.000 kg/h
Cabbage cutting discs	Cutting of cabbage	ca. 3.000 kg/h

*The throughputs are dependent on cutting thickness and product.

The figures shown here are for illustration only and may deviate from the actual design version. Technical alterations are reserved. or additional accessories please refer to our price list.

alexandersolia GmbH Alexanderstr. 59 – 61 D-42857 Remscheid
info@alexandersolia.com www.alexandersolia.com

Alexanderwerk SOLIA®