alexandersolia
Food processing

AW MI RANGE

MIXING AND BLENDING MACHINES

GASTRONOMY / COMMERCIAL KITCHENS / CANTEENS / BUTCHERIES / FOOD INDUSTRY

MIXING AND BLENDING

BOWL CAPACITIES
4 – 120 KG

At a glance:

- → Gentle, homogenous, versatile mixing and blending
- → 100 % stainless steel
- → Available with one or two motors (rotating bowl)
- → Mobile, for easy movability
- → Mixing time cut by half due to simultaneous moving of produce from top to bottom
- → Easy, hygienic cleaning
- → Start/stop via safety switch

Bowl may be tilted to the front for easy emptying

New patented mixing paddle in 'double-spoon design'. Optimised bowl geometry, with scraper

Swivel casters with brake for easy movement

Upper machine part tiltable with pneumatic spring

AW MI 40, 65, 95, 165

Technical data

Technical data

	AW MI 40 P	AW MI 65 P	AW MI 95 P	AW MI 165 P
Power supply	400 V, 50 Hz, cable with CEE plug 5-p	400 V, 50 Hz, cable with CEE plug 5-p	400 V, 50 Hz, cable with CEE plug 5-p	400 V, 50 Hz, cable with CEE plug 5-p
Paddle speed (rpm)	47	47	47	47
Bowl speed (rpm)	14	14	14	9
Total output (kW)	0,43	0,50	0,80	1,87
Fuse protection (A)	16	16	16	16
Ingress protection	IP 54 (splash-proof)	IP 54 (splash-proof)	IP 54 (splash-proof)	IP 54 (splash-proof)
Dimensions (L x B x H mm)	580 x 860 x 1000 (H max. 1160)	690 x 990 x 1060 (H mx. 1300)	760 x 1110 x 1190 (H max. 1440)	910 x 1250 x 1330 (H max. 1640)
Weight (kg)	104	117	157	291
Bowl capacity (kg) / (l)	4 - 24 / 40	7 - 40 / 65	15 - 65 / 95	20 - 120 / 165
Optional infinitely adjustable mixing arm speed	x	x	x	x
Optional model economy (1 motor)	x	x	–	–

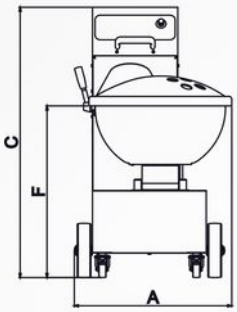

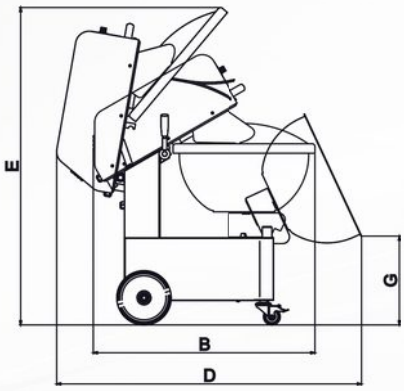

cm	MI 40	MI 65	MI 95	MI 165
A	58	69	76	91
B	86	99	111	125
C	100	106	119	133
D	117	130	144	165
E	116	130	144	164
F	67	70	78	93
G	34	35	32	44

The figures shown here are for illustration only and may deviate from the actual design version.
Technical alterations are reserved. For additional accessories please refer to our price list.

alexandersolia GmbH Alexanderstr. 59 – 61 D-42857 Remscheid
info@alexandersolia.com www.alexandersolia.com

Alexanderwerk SOLIA®