alexandersolia
Food processing

AW K RANGE

WASHING AND PEELING

FOR 100 – 1.000 MEALS A DAY

POTATO WASHING AND PEELING MACHINES

GASTRONOMY / CANTEENS / COMMERCIAL KITCHENS / FOOD INDUSTRY

At a glance:

- → Solid, stable, rustproof design
- → Safety switch-off of the cover (motor stop according to EU standard)
- → Water saving regulation (Water supply only with engine running)
- → Choice of peeling processes with automatic peeling times
- → Rubber-lined interior with cushioning effect ensures gentle processing

Accessories

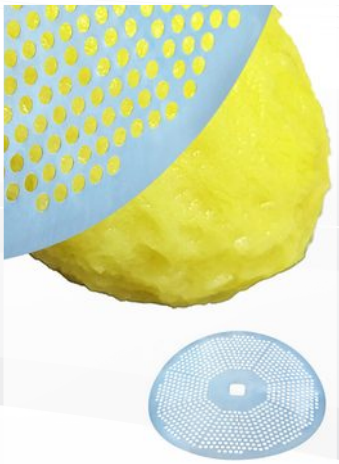

Perforated peeling discs
Surface slightly uneven, minimal browning, longer peeling time.

Knife peeling disc
smooth surface, peeled hand quality, more waste, hardly any browning, shorter peeling time.

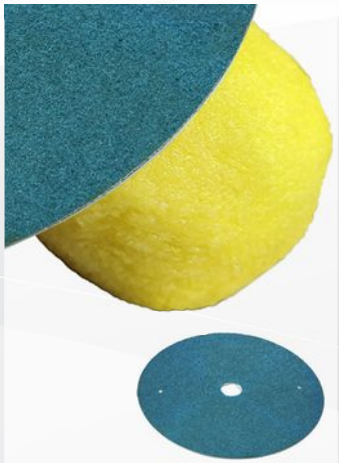

Carborundum peeling disc
ideal for peeling tuber vegetables
Rough surface, minimal peeling waste, quick browning, short peeling time.

PEELING AND WASHING OF TUBERS, E.G. POTATOES, BEETROOT ETC

Technical Data

AW K 8.3
For 100 to 600 servings a day

Included:
- → Standard bowl outlet to the left, incl. turning wing and supporting disc
- → Perforated peeling disc no. 0, 1 and 2

AW K 15.3
For 500 to 1000 servings a day

Included:
- → Standard bowl outlet to the left, incl. turning wing and supporting disc
- → Perforated peeling disc no. 0, 1 and 2

AW K 35.3
From 1000 servings a day

Included:
- → Standard bowl outlet to the left, incl. turning wing and supporting disc
- → Perforated peeling disc no. 0, 1 and 2

AW K 8.3

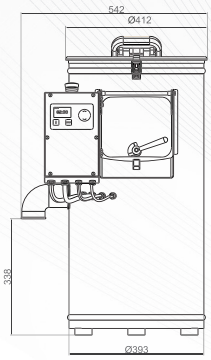

AW K 15.3

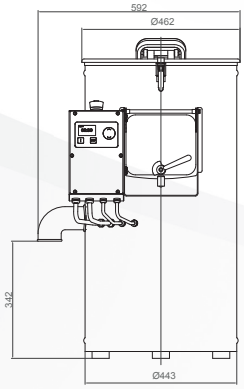

AW K 35.3

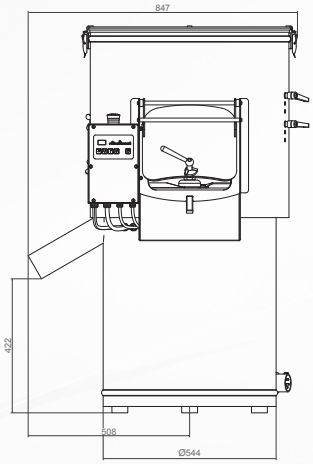

Technical data

	AW K 8.3	AW K 15.3	AW K 35.3
Power supply	400 V, 50 Hz 2,7 m cable with CEE plug 5-p	400 V, 50 Hz 2,7 m cable with CEE plug 5-p	400 V, 50 Hz 2,7 m cable with CEE plug 5-p
Water connection	Tube R 1/2"	Tube R 1/2"	Tube R 1/2"
Output (kW)	0,43	0,43	2,2
Fuse protection (A)	16	16	16
Ingress protection	IP 54 (splash-proof)	IP 54 (splash-proof)	IP 54 (splash-proof)
Infinitely variable speed control (rpm)	160 / 320	160 / 320	160 / 320
Water consumption approx. l/min	6 - 8	8 - 10	15
Dimensions (L x B x H mm)	542 x 608 x 879	592 x 666 x 942	847 x 892 x 1230
Weight (kg)	42	50	169

Processing capacity

	AW K 8.3	AW K 15.3	AW K 35.3
Filling capacity (kg)	8	15	30 - 40
Peeling capacity*(kg/h)	200	400	500 - 1200

*Capacity per peeling process: calculated at a total operating time of max. 8 hours a day

The figures shown here are for illustration only and may deviate from the actual design version. Technical alterations are reserved. For additional accessories please refer to our price list.

alexandersolia GmbH Alexanderstr. 59 – 61 D-42857 Remscheid
info@alexandersolia.com www.alexandersolia.com

Alexanderwerk SOLIA®