alexandersolia
Food processing

AW F RANGE

MEAT MINCER

BUTCHERIES / GASTRONOMY / CANTEENS/
COMMERCIAL KITCHENS

MINCING AND SHREDDING
THROUGHPUT OF
200 – 800 kg/h

At a glance:

Meat mincer of the AWF range

- → High throughput and excellent durability
- → Unit incl. cutting set made of 100 % stainless steel
- → Large meat tray
- → Removable worm housing for easy and hygienic cleaning
- → Injury protection CE compliant
- → Enclosed unit
- → Thermoprotected drive
- → Safety switch

AW F 82.2

- → Minimal depth – space saving on the worktop
- → Smart control with shutdown when overloaded
- → Easy to use
- → Cleaned housing – shapely and easy to clean

1/1 Gastronorm container fits underneath

Easily removable meat tray entirely in stainless steel – suitable for dishwashers.

Easy removable worm housing for hygienic cleaning outside the drive removable mincer. e.g. for refrigerated storage.

Easily removable external worm casing for hygienic cleaning.

Technical data

AW F 82.2 Meat Mincer, table unit

Throughput 200 to 300 kg/h

Power supply	400 V, 50 Hz 2,5 m cable with CEE plug 5-p
Output (kW)	1,1
Fuse protection (A)	16
Dimensions	IP 54 (slpash-proof)
Dimensions (L x B x H)	498 x 495 x 428 mm
Weight (kg)	50
Meat tray (l)	7,75
Cutting set	3-part, L&W, stainless steel, optional 5-part

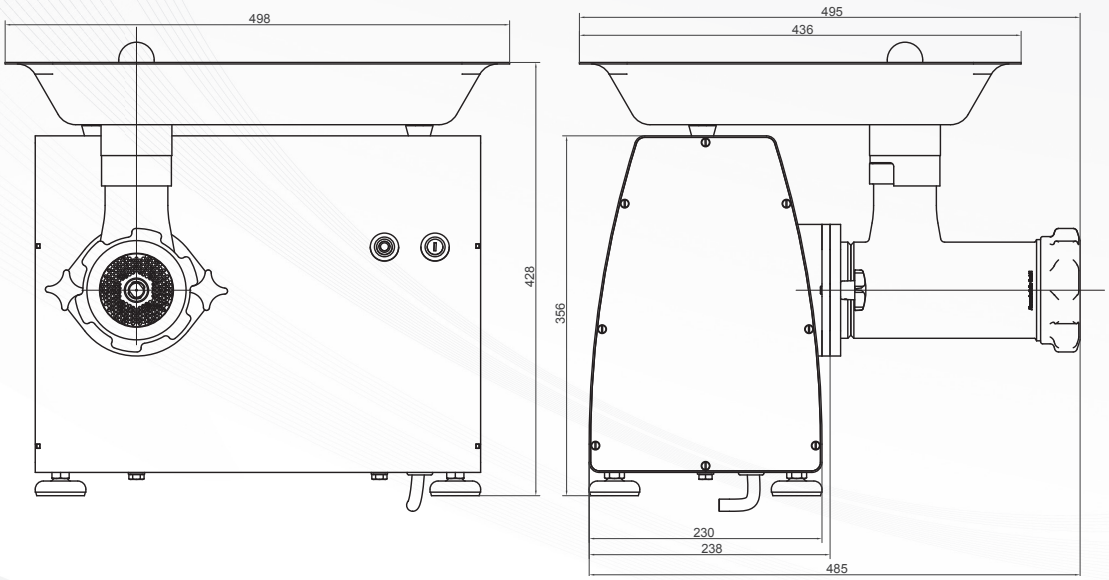

AW F 98 Meat Mincer, table or floor-mounted unit

Throughput 700 to 800 kg/h

Power supply	400 V, 50 Hz, 2,5 m cable with CEE plug 5-p, optional 230 V
Output (kW)	2,2 optional 1,8
Fuse protection (A)	20
Dimensions	IP 54 (splash-proof)
Dimensions (L x B x H)	870 x 560 x 1020 / 780 x 420 x 610 mm
Weight (kg)	130 / 87
Meat tray (l)	52 / 23
Cutting set	3-part, L&W, stainless steel, optional 5-part

The figures shown here are for illustration only and may deviate from the actual design version. Technical alterations are reserved. For additional accessories please refer to our price list.

alexandersolia GmbH Alexanderstr. 59 – 61 D-42857 Remscheid
info@alexandersolia.com www.alexandersolia.com

Alexanderwerk SOLIA