alexandersolia
Food processing

AW CU RANGE

KITCHEN CUTTER

GASTRONOMY / CANTEENS / COMMERCIAL KITCHENS / BUTCHERIES / FOOD INDUSTRY

CHOPPING AND MIXING

BOWL CAPACITY 15 – 30 LITER

At a glance:

- → Table unit with 15 l bowl;
- → Floor-mounted unit with 30 l bowl
- → Ideal for mixing and chopping of meat, fish, vegetables, herbs, fruit pulp
- → One motor infinitely variable blade shaft speed
- → Cutter bowl, bearing arm for knife driving shaft made of stainless steel
- → Restart protection
- → Temperature sensor located in cavity of lid
- → Removable, self-adjusting lid/bowl friction band

Solid stainless steel bowl

Removable knife head with 3 high quality knives, optional with 6 knives

10"-Touchscreen with digital display of blade speed, temperature, time, remaining time.
Variable blade speed 500 – 3500 U/min.
+ 4 fast-select keys

Cutter hood with transparent noise protective lid

Technical data

AW CU 30.2

AW CU 15.2

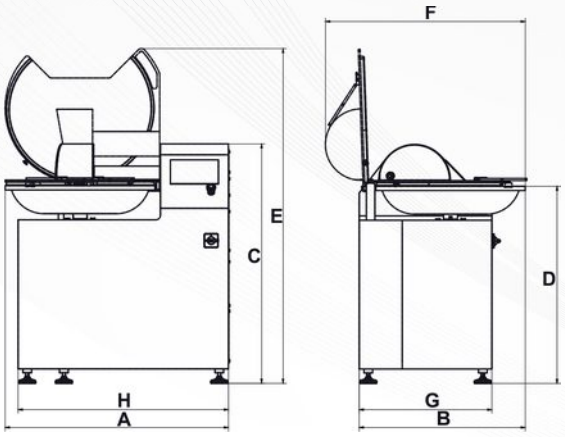

cm	CU 15.2	CU 30.2
A	93	104
B	63	77
C	68	112
D	40	92
E	100	156
F	75	93
G	51	62
H	83	98

Technical data

	AW CU 15.2	AW CU 30.2
Power supply	230 V, 50 Hz cable with CEE plug 5-p	400 V, 50 Hz cable with CEE plug 5-p
Output (kW)	3	5,6
Fuse protection (A)	16	16
Ingress protection	IP 54 (splash-proof)	IP 54 (splash-proof)
Dimensions (L x B x H)	930 x 630 x 680 (including bowl) H max. 1000	1040 x 770 x 1.120 (including bowl) H max. 1.560
Weight (kg)	165	330
Bowl capacity (l)	15	30
Knife speed	variable 500 to 3500 rpm, preselect-buttons, freely configurable	variable 500 to 3500 rpm, preselect-buttons, freely configurable
Linear knife speed	9-37 m/s	12-48 m/s

The figures shown here are for illustration only and may deviate from the actual design version. Technical alterations are reserved. For additional accessories please refer to our price list.

alexandersolia GmbH Alexanderstr. 59 – 61 D-42857 Remscheid
info@alexandersolia.com www.alexandersolia.com

Alexanderwerk SOLIA®