alexandersolia
Food processing

AW BS 150

VEGETABLE CUTTER

COMMERCIAL KITCHEN / FOOD-/
DELICATESSEN INDUSTRY

CUTTING AND CHOPPING

THROUGHPUT UP TO 1.200 kg/h

At a glance:

- → Entirely made of stainless steel
- → 1000 mm belt extension as standard
- → Infinitely variable belt regulation, infinitely variable knife speed
- → Tools with cutting capacity ranging from 0.5 mm to 80 mm
- → Width of cutting shaft and conveyor belt 150 mm, with a height of 70 mm
- → Quick removal of pressure and conveyor belts by simple unlocking without additional tools
- → Access protections by means of a shatterproof, electronically locked transparent hood
- → Cropping knife with hardened, exchangeable edge; gentle, precise cuts and self-sharpening
- → Smooth design of conveyor belt area in order to avoid product clusters

Setting of upper conveyor belt according to product

Gentle-touch cutting device ensures precise for clean cuts

Only coarse pre-chopping required thanks to generous in-feed width

Range of tools for a variety of infinitely variable cuts

Accessories

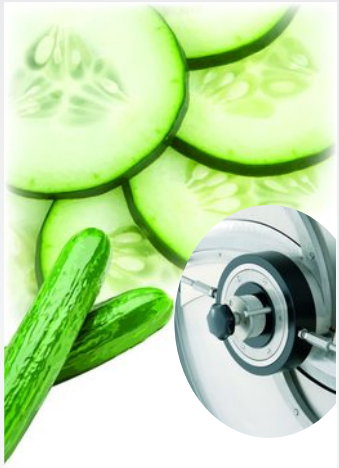

Curved blade disc, adjustable 0.5 to 25 mm
335607

Slice cutting of e.g. cucumber, carrots, celery, onions, potatoes, herbs

Open two-bladed knife, stainless steel, up to 90 mm cuts
334325

Strip cutting e.g. salad, china cabbage, savoy

Slicing disc with for knives

1,3 mm	334333
3,0 mm	334334
4,0 mm	334332

Slice cutting of e.g. cabbage

Strip cutting disc

2,5 x 2,0 mm Juliennes	334327
3,5 x 3,0 mm Juliennes	334328
4,5 x 4,0 mm Juliennes	334458
7,0 x 7,0 mm	335603

Strip cutting of e.g. carrots, turnips, radish

Shredding disc including supporting disc

3 mm	335762
4 mm	335763

Shredding of e.g. celery, radish, Potatoes

Mobile knife stand for 6 discs
335485

Mobile preparation tables with four lockable castors and cutting board for two to four work spaces

2 work spaces	335618
4 work spaces	715 031 000

Technical data

Technical data

Power suppy belt drive	230 V, 50 Hz (3P + PE)
Output (kW)	0,37
Infinitely variable speed control (rpm)	34
Range of rational speed (rpm)	2 - 70
Fuse protection (A)	1,25

Power supply knife motor	230 V, 50 Hz (3P + PE)
Output (kW)	1,1
Infinitely variable speed control (rpm)	302
Range of rational speed (rpm)	90 - 600
Fuse protection (A)	16

Cable	4,5 m, (1P) CEE-plug
Ingress protection	IP 54 (splash-proof)
Dimensions (L x B x H mm) mit belt extension 400	1594 x 632 x 1250
Dimensions (L x B x H mm) with belt extension 1000	2194 x 632 x 1250
Dimensions (L x B x H mm) with belt extension 1500	2694 x 632 x 1250
Weight (kg)	230
Weight with belt extension (kg)	ca. 250

AW BS 150 Vegetable cutter

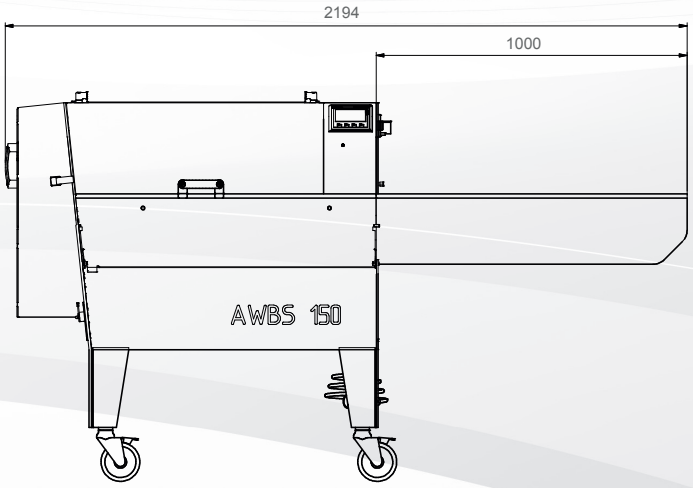

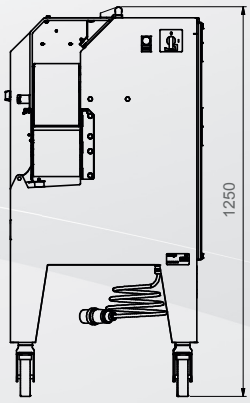

Technical data

The figures shown here are for illustration only and may deviate from the actual design version. Technical alterations are reserved. For additional accessories please refer to our price list

Processing capacity

Product	Tool	Cutting length/mm	Throughput/h in kg
Chicory	Open two-bladed knife	5	470
Chinese cabbage	Open two-bladed knife	6	860
Dill	Curved blade disc	1	24
Iceberg lettuce	Open two-bladed knife	6	380
Iceberg lettuce	Open two-bladed knife	20	720
Endive	Open two-bladed knife	3	115
Cucumber	Curved blade disc	2	270
Carrot	Curved blade disc	2	160
Carrot	Strip cutting discs 3 x 3.5 mm	–	320
Carrot	Shredding disc 3 mm	–	360
Carrot	Shredding disc 4 mm	–	420
Potato	Curved blade disc	4	680
Potato	Curved blade disc	6	1000
Turnip cabbage	Strip cutting disc 3 x 3.5 mm	–	600
Turnip cabbage	Strip cutting disc 7 x 7 mm	–	1035
Spring onion	Curved blade disc	–	240
Bell pepper	Curved blade disc	4	210
Bell pepper	Curved blade disc	6	330
Parsley	Curved blade disc	1	20
Leek	Curved blade disc	2	180
Radicchio	Open two-bladed knife	6	310
Radish	Curved blade disc	2	340
Salad	Open two-bladed knife	25	1000
Chives	Open two-bladed knife	1	25
Chives	Open two-bladed knife	3	80
Celery	Strip cutting disc 3 x 3.5 mm	–	490
Celery	Shredding disc 3 mm	–	800
Celery	Shredding disc 4 mm	–	1020
Tomato	Curved blade disc	4	300
Tomato	Curved blade disc	6	440
Cabbage	Strip cutting discs with 4 knifes	1,3	500
Cabbage	Curved blade disc	1,5	160
Savoy	Open two-bladed knife	8	440
Onion	Curved blade disc	4	520

The values specified are average values and can be doubled by increasing the knife and beltspeed.

alexandersolia GmbH Alexanderstr. 59 – 61 D-42857 Remscheid
info@alexandersolia.com www.alexandersolia.com

Alexanderwerk SOLIA®